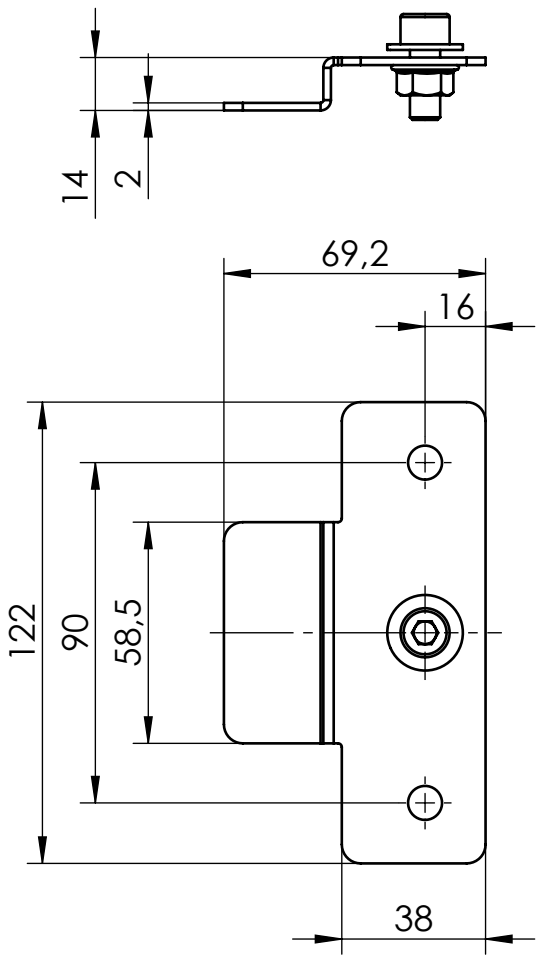


Isometric

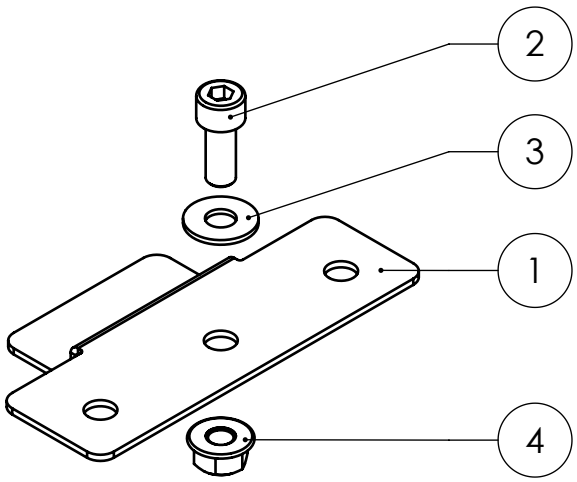


The components are not pre-assembled

| Pos.No. | Designation | Material | Quantity |
|---|---|---|---|
| 1 | StairPlate | 1.4301 (X5CrNi18-10) | 1 |
| 2 | Socket head bolt serrated - sim. ISO 4762 - M8x20 | A2-70 | 1 |
| 3 | Washer - DIN 9240 - 8,4x20x1,5 | A2-70 | 1 |
| 4 | Hexagon flange nut - ISO 4161 - M8 | A2-70 | 1 |

K2 Systems GmbH
Haldenstr. 1
71272 Renningen
Germany
+49 7159 42059-0

Designation:

# Data sheet StairPlate Set

| | Name | Date | Material: | Item no.: | A4 |
|---|---|---|---|---|---|
| Designed | S. Frey | 02.11.2020 | see table | 2004057 | |
| Approved | M. Schuler | 27.03.2025 | Surface: - | Drawing no.: 04-084-01 | All dimensions in mm |
| Last change | S. Frey | 27.03.2025 | Weight: ca. 134.5 g/pc Scale: 1:2 | | Sheet 1 of 1 |

This drawing is the sole property of K2 Systems GmbH. It is protected by copyright and may only be copied, reproduced or distributed to a third party with explicit permission!